SC ULTIMATE LINE

07-10-07

EFFECTIVE S/N 200701618

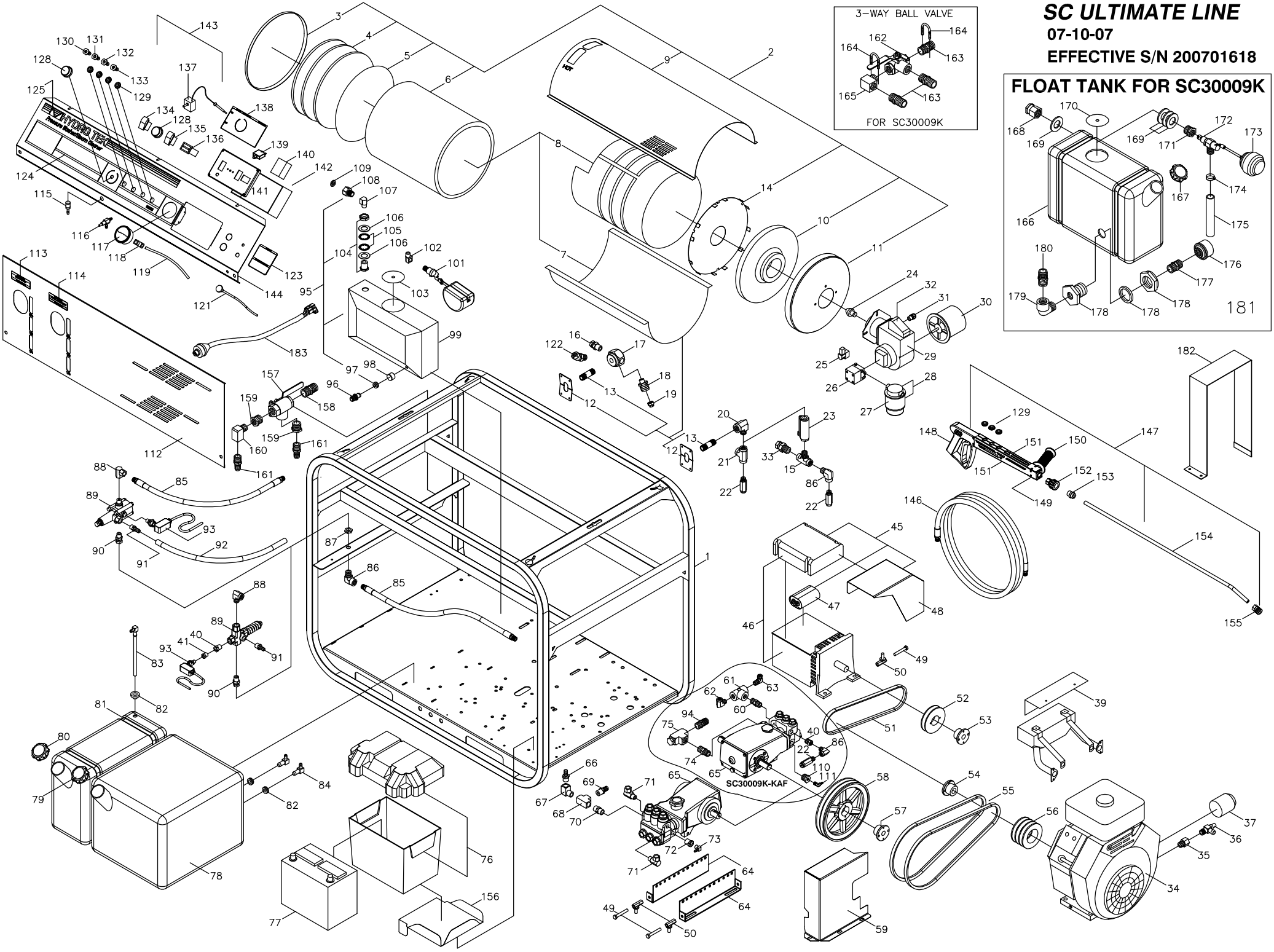

SC ULTIMATE LINE PARTS LIST

07-10-07 EFFECTIVE S/N 200701618

1	HSC00	SC FRAME, P COATED PRO TEC	ALL
2	BC485	COIL ASM 4PK SCH 80 (SC ULTIMATE)	ALL
3	B0028	COIL CAP FLAT SC 18" NO HOLE	ALL
4	BN053	INSUL BLKT 5OSQ'1/2X24 8 # 25'	ALL
5	BN112	INSULATION DISC RETAINER 18"	ALL
6	BN053	INSUL BLKT 5OSQ'1/2X24 8 # 25'	ALL
7	B2323	COIL WRAP BOTTOM ASM	ALL
8	BC480	COIL, 4PK SCH 80	ALL
9	B2314	COIL WRAP TOP SC EXTENDED 43"	ALL
10	BN054	INSULATION HEAD (top hat)	ALL
11	B0013	COIL CAP ASM 18in 4.5id GRAINED	ALL
12	B2324	COIL NIPPLE RETAINER 1/2in	ALL
13	BC850	BURNER NIPPLE, 1/2x5 SCH80	ALL
14	BN111	INSULATION DISC RETNR 4in HOLE	ALL
15	DEB66	BRANCH TEE 3/8" STEEL	SC30009KAF
16	DE568	SWIVEL 3/8F X 1/2M STEEL	ALL
17	HHA00	HEX MANIFOLD OUTLET 1/2 X 1/2 NO REEL	ALL
18	UPB05	ADAPTER FITTING-BURST DISC	ALL
19	UPB80	BURST DISC 8000psi	ALL
20	DE586	STREET ELL 1/2"F x 3/8"M STEEL	ALL
21	DE066	TEE 3/8" STEEL	SC33005V,SC30009K,SC35006KQ
			SC35006VQ,SC35006HQ
22	UP137	PRESSURE RELIEF 3700psi black -100qty	SC33005V,SC30009K,SC30009KAF
	UP045	PRESSURE RELIEF 4500+15% 500q	SC35005KQ,SC35006VQ,SC35006HQ
23	VS005	FLOW SWITCH 8 @ 4200 ST5	SC30009KAF
24	BZ300	FUEL NOZZLE 3.00 90B	SC33005V,SC35005KQ
	BZ400	FUEL NOZZLE 4.0 90B	SC30009K,SC30009KAF
	BZ350	FUEL NOZZLE 3.5 90B	SC35006VQ,SC35006HQ
25	BPV10	FUEL VALVE 120V	ALL
26	BPA10	FUEL PUMP MOD A2VA-7116	ALL
27	BF025	RACOR FILTER CARTRIDGE	ALL
28	BF020	FUEL FILTER, RACOR HYDRO TEK	ALL
29	BU007	BURNER, WAYNE 110V CAP 2-3	ALL
30	BM554	BURNER MOTOR 115V WAYNE	ALL
31	EWC08	STRAIN RELIEF 1/2 HEYCO (3/8)	ALL
32	BMT10	IGNITION TRANSFORMER 115V	ALL
33	DE868	SWIVEL 3/8"M x 1/2"FS	SC30009KAF
34	MK250	ENGINE 25hp KOHLER W/MUFLR	SC30009K,SC30009KAF
	MS150	ENGINE GAS 16HP VANGUARD E/S	SC33005V
	MK200	ENGINE 20HP KOHLER CS W/MUFFLER	SC35005KQ
	MS210	ENGINE GAS 21HP VANGUARD E/S W/MUFFLER	SC35006VQ
	MH240	ENGINE 24HP HONDA E/S W/MUFFLER	SC35006HQ
35	D4060	MALE ADAPTER 3/8 BRASS	SC35005KQ,SC35006VQ,SC30009K
			SC30009KAF
36	MS007	OIL DRAIN VALVE 14MM	SC35006HQ
	MS006	OIL DRAIN VALVE 3/8	SC33005V,SC35005KQ,SC30009K
			SC35006VQ,SC30009KAF
37	MH520	OIL FILTER, HONDA 20HP	SC35006HQ
	MK400	OIL FILTER, 14, 18, 25HP KOHLER	SC35005KQ,SC30009K,SC30009KAF
	MS185	OIL FILTER 16&18HP B&S	SC33005V
39	HS088	MUFFLER HEAT SHIELD 24HP HONDA	SC35006HQ
	HS022	KOHLER MUFF/BURNER HEAT SHIELD 18HP	SC35005KQ
	HS074	KOHLER MUFF/BURNER HEAT SHIELD 25 HP	SC35006VQ,SC30009K,SC30009KAF
	HS021	VANGAURD MUFF/BURNER HEAT SHIELD 16HP	SC33005V
40	DA086	BUSHING 1/2" x 3/8" STEEL	SC30009KAF
41	DA064	BUSHING 3/8" x 1/4" STEEL	SC30009KAF
45	MB050	SC GENERATOR & GUARD ASSEMBLY	ALL
46	MB020	GENERATOR 2500w LSA321L10	ALL
47	MB025	CAPACITOR, MB020 GENERATOR	ALL
48	HS033	SC GEN BELT GUARD	ALL
49	FB641	BOLT 3/8 X 2 1/2 PLD ALLTHREAD	ALL
50	HPR60	PUMP RAIL BOLT	ALL
51	KSA30	BELT 5L230	SC33005V,SC35006VQ
	KSA33	BELT 5L240	SC35006HQ,SC30009K,SC30009KAF
	KSA32	BELT 5L250	SC35005KQ
52	KT040	SHEAVE BK40H	SC30009K,SC30009KAF
	KT032	SHEAVE BK32H	SC35006VQ
	KT036	SHEAVE BK36H	SC33005V,SC35006HQ
	KT045	SHEAVE BK45H	SC35005KQ
53	KSH19	BUSHING H24MM	ALL
54	KSP23	BUSHING P1 X 1 7/16	SC30009K,SC30009KAF,
	KSP18	BUSHING P1 x 1 1/8	SC35006HQ
	KSP16	BUSHING P1 X 1	SC33005V,SC35005KQ,SC35006VQ
55	KSB4X	BELT BX40	SC35005KQ,SC35006VQ
	KSB36	BELT BX36	SC33005V
	KSB49	BELT Bx 49	SC30009K,SC30009KAF
	KSB42	BELT BX42	SC35006HQ
56	KV038	SHEAVE 3TB38	SC33005V,SC35006VQ
	KV046	SHEAVE 3TB46	SC35005KQ,SC35006HQ
	KV060	SHEAVE 4TB38	SC30009K,SC30009KAF
57	KSH17	BUSHING H20MM	SC33005V,SC35005KQ
	KSH19	BUSHING H24MM	SC35006HQ,SC35006VQ
	KSH21	BUSHING H30MM	SC30009K,SC30009KAF
58	KU100	SHEAVE 2BK100H	SC35006VQ
	KU080	SHEAVE 2BK80H	SC33005V
	KV110	SHEAVE 3BK110H	SC30009K,SC30009KAF
	KU090	SHEAVE 2BK90H	SC35005KQ
	KU110	SHEAVE 2BK110H	SC35006HQ
59	HSC54	SC PUMP BELT GUARD KOHLER 25HP	SC35005KQ,SC35006VQ
	HS036	SC PUMP BELT GUARD 16HP VAN	SC33005V
	HS078	SC PUMP BELT GUARD-HONDA 20HP	SC35006HQ
	HSC66	PUMP BELT GUARD SC W/CAT 660	SC30009K,SC30009KAF
60	DB508	NIPPLE 1/2" STEEL	SC30009K,SC30009KAF
61	DE088	TEE 1/2" STEEL FORGED	SC30009K,SC30009KAF
62	DC588	STREET ELL 1/2" STEEL	SC30009K,SC30009KAF
63	DE869	SWIVEL 3/8"FS x 1/2"M STEEL 90 DEGREE	SC30009K,SC30009KAF
64	HPR01	ANGLE RAIL, PR,SC PUMP	SC33005V,SC35005KQ,SC35006HQ
			SC35006VQ
	HPR05	HOSS REINFORCED PUMP RAIL	SC30009K,SC30009KAF
65	P4535	PUMP 5CP3120 4.5 @ 3500	SC33005V,SC35005KQ
	P6056	PUMP #56 5.5@3500or6.5@3000	SC35006VQ,SC35006HQ
	P9966	PUMP #660 10 @ 3000 SHAFT 30MM	SC30009K,SC30009KAF
66	D8088	HOSE BARB 1/2 BRASS	SC33005V,SC35005KQ,SC35006VQ
			SC35006HQ
67	D5588	ELBOW, STREET, 1/2", BRASS	SC33005V,SC35005KQ,SC35006VQ
			SC35006HQ
68	D6588	STREET TEE 1/2 BRASS	SC33005V,SC35005KQ
	D6088	TEE 1/2 BRASS	SC35006HQ,SC35006VQ
69	D8077	HOSE BARB 5/8H x 1/2M.406 ID RED	SC33005V,SC35005KQ
	D8078	HOSE BARB 5/8Hx1/2M .50id GRN ASM	SC35006HQ,SC35006VQ
70	D2088	NIPPLE 1/2 BRASS	SC35006HQ,SC35006VQ
71	DE866	SWIVEL 3/8F X 3/8M 90	SC33005V,SC35005KQ,SC35006HQ
			SC35006HQ
72	D1084	BUSHING 1/2 X 1/4 BRASS	SC33005V,SC35005KQ,SC35006HQ
			SC35006HQ
73	D8040	HOSE BARB 1/4 90 ELBOW	SC33005V,SC35005KQ,SC35006HQ
			SC35006HQ
74	D2089	NIPPLE 3/4" BRASS	SC30009K,SC30009KAF
75	D6120	TEE 3/4" BRASS (NOT POTTED)	SC30009K,SC30009KAF
76	HB100	BATTERY BOX ATTWOOD G24 (LARGE)	ALL
77	EB24F	BATTERY GROUP 24 550 OCCA	ALL
78	WT078	FUEL TANK 18 DIESEL CLEAR	ALL
79	WT080	FUEL CAP, DIESEL	ALL
80	WT081	FUEL CAP, GASOLINE	ALL
81	WT075	FUEL TANK 7.5 DIESEL CLEAR	ALL
	WT07R	FUEL TANK 7.5 GAS RED	ALL
82	DFF04	FUEL TANK BUSHING 1/4	ALL
83	DF599	FUEL TANK ADAPTER W/PLASTIC TUBE	ALL
84	DFE04	FUEL TANT ELL 1/4"	ALL
85	DH034	HOSE 3/8"x 34" 5000PSI NO WIP GD	SC33005V,SC35005KQ,SC35006VQ
			SC35006HQ
	DH038	HOSE 1/2" x 34" 3500PSI NO WIP	SC30009K,SC30009KAF
86	DC568	STREET ELL 3/8"	SC33005V,SC35005KQ,SC35006VQ
			SC35006HQ
	DE568	SWIVEL 3/8"F x 1/2"M STEEL	SC30009K
	DC588	STREET ELL 1/2" STEEL	SC30009KAF
87	D7061	HEX NUT 3/8" BRASS-REMOTE UNLODER	ALL
88	DE766	SWIVEL 3/8"F x 90 STEEL	SC33005V,SC35005KQ,SC35006VQ
			SC35006HQ
	D5047	ELL 1/2"F x 3/8"F STEEL	SC30009K
89	UU371	UNLOADER 3-5 @ 3200 K7-1	SC33005V,SC35005KQ
	UU375	UNLOADER K7-2 W/BYPASS #1	SC30009K,SC35006VQ,SC35006HQ
	UU320	UNLOADER/REGUL 4000@ 21 GREEN	SC30009KAF
90	DE566	SWIVEL 3/8" STEEL	SC33005V,SC35005KQ,SC35006VQ
			SC35006HQ
	DE869	SWIVEL3/8"FS x 1/2"M	SC30009KAF
91	D8068	HOSE BARB 1/2"H x 3/8" BRASS	ALL
92	DHC80	HOSE, 1/2" LOW PRESS BLACK	ALL
93	VSO30	PRESSURE SWITCH 4000 PA/PR16	ALL
94	D8169	HOSE BARB 1"H x 3/4"P BRASS	SC30009K,SC30009KAF
95	WT046	FLOAT TANK ASM W/VALVE;SPECIFY	SC33005V,SC35005KQ,SC35006VQ
			SC35006HQ
96	DQF10	DISCONNECT BARB/TANK FITTING	SC33005V,SC35005KQ,SC35006VQ
			SC35006HQ
97	DFF10	WATER TANK BUSHING 5/8	SC33005V,SC35005KQ,SC35006VQ
			SC35006HQ
98	VF050	STRAINER TUBE FOR FLOAT TANK	SC33005V,SC35005KQ,SC35006VQ
			SC35006HQ
99	WT040	TANK, FLOAT 4 GAL HD LINEAR (NO HOLES)	SC33005V,SC35005KQ,SC35006VQ
			SC35006HQ
101	VVF08	FLOAT VALVE 3/8 BRASS	SC33005V,SC35005KQ,SC35006VQ
			SC35006HQ
102	D5566	STREET ELL 3/8 BRASS	SC33005V,SC35005KQ,SC35006VQ
			SC35006HQ
103	HL017	TANK CAP 4in W/HOLE	SC33005V,SC35005KQ,SC35006VQ
			SC35006HQ
104	D7520	PANEL FITTING 3/4 BRASS	SC33005V,SC35005KQ,SC35006VQ
			SC35006HQ
105	FW700	WASHER LOCK 1in GALV	SC33005V,SC35005KQ,SC35006VQ
			SC35006HQ
106	HHN61	HUDSON FLOAT VALVE WASH 14GA	SC33005V,SC35005KQ,SC35006VQ
			SC35006HQ
107	D5566	STREET ELL 3/8 BRASS	SC33005V,SC35005KQ,SC35006VQ
			SC35006HQ
108	D006M	GARDEN H A 3/8 NPT MALE	SC33005V,SC35005KQ,SC35006VQ
			SC35006HQ
109	D0021	SCREEN WASHER GARDEN H A	SC33005V,SC35005KQ,SC35006VQ
			SC35006HQ
110	D1127	BUSHING 3/4"M x 1/4"F BRASS	SC30009K,SC30009KAF
111	D8040	HOSE BARB 1/4" 90 ELBOW	SC30009K,SC30009KAF
112	HS038	SC FUEL TANK PANEL	ALL
113	GLL10	LABEL GASOLINE ONLY	ALL
114	GLL20	LABEL DIESEL FUEL ONLY	ALL
115	VF045	STRAINER CHEMICAL W/CHECK	ALL
116	VVC10	CHEMICAL MET VALVE MV-100 MOD.	ALL
117	UG055	GAUGE, 5000 PSI DUAL SCALE, PNL MOUNT	ALL
118	D5044	ELL 1/4 BRASS	ALL
119	DH105	HOSE 1/4 X 19 5000PSI / GAUGE	ALL
121	HL216	CHOKE CABLE 6'	SC30009K,SC30009KAF,SC35005KQ
122	DE606	SWIVEL 45 3/8"M x 3/8"F STEEL	SC30009KAF
	D1061	PLUG 3/8" FLUSH HEAD HEX STEEL	SC33005V,SC35005KQ,SC35006HQ
			SC35006VQ,SC30009K
123	GLL30	MAINTENANCE LABEL 4x4 SC,SS,SM	ALL
124	GLL53	LABEL SC OPS/WARNING 4x31in	ALL
125	GLL75	LABEL HYDRO TEK 34 X 2 3/4	ALL
128	ECH70	KNOB, BLUE .25ID X 1.5OD	ALL
129	HLB09	GROMET NOZZLE HOLDER	ALL
130	NQ950	NOZZLE/QDC 10 x 0	SC30009K
	NQ500	NOZZLE/QDC 05 X 0	SC33005V,SC35005KQ,SC30009KAF
	NQ600	NOZZLE/QDC 06 x 0	SC35006HQ,SC35006VQ
131	NQ952	NOZZLE/QDC 10 x 15	SC30009K
	NQ502	NOZZLE/QDC 05 X 15	SC33005V,SC35005KQ,SC30009KAF
	NQ602	NOZZLE/QDC 06 x 15	SC35006HQ,SC35006VQ
132	NQ954	NOZZLE/QDC 10 x 40	SC30009K
	NQ504	NOZZLE/QDC 05 X 40	SC33005V,SC35005KQ,SC30009KAF
	NQ604	NOZZLE/QDC 06 x 40	SC35006HQ,SC35006VQ
133	NQ653	NOZZLE/QDC 25 x 065	SC30009K
	NQ453	NOZZLE/QDC 045 X 25	SC33005V,SC35005KQ
	NQ503	NOZZLE/QDC 05 x 25	SC35006HQ,SC35006VQ
134	EC410	ROCKER SWITCH 110V RED SPST	ALL
135	EC411	ROCKER SWITCH 110V CLEAR SPST	ALL
136	EM601	HOUR METER 110V	ALL
137	ECH50	THERMOSTAT,60-250 1 GP PART=25-250 qty	SC33005V,SC35005KQ,SC35006HQ
			SC35006VQ,SC30009K
	ECH55	THERMOSTAT; 60-190F***	SC30009KAF
138	GLL57	LABEL,SC/SS PANEL CONTOL BOX	ALL
139	ECF10	CIRCUT BREAKER 15 AMP	ALL
140	EP154	GFCI DUPLEX RECEPTACLE 15 AMP	ALL
141	EWB06	ELECTL BOX 7.8x4.7x3.2 HOFMN	ALL
142	HSC51	LASER CUT SC BOX ASM/TOP AND BOTTOM	ALL
143	HS034	SC CONT PNL ASM ULT. 115VAC	ALL
144	HSC50	SC CONT PANEL, EZ ACCESS	ALL
146	DH060	HOSE 3/8 X 50' 5000 blugry NON MARKING	ALL
147	AVWC3	ULTRA GUN/WAND 48" W/TWIST COUPLER	ALL
148	VG200	GUN VALVE 12 @ 4000 ST1500	ALL
149	VWS02	WAND HANDLE CLIP ASSEM.	ALL
150	HL010	HAND GRIP 1in MX	ALL
152	DQ74S	TWIST COUPLER 1/4 SOCK FEM	ALL
151	VWS10	SC/SS ULT WAND CUT GROUP	ALL
153	DQ74F	TWIST COUPLER 1/4 PLUG FEM-sut	ALL
154	VW030	WAND 1/4 X 30 ZINC PLATED W/15 BEND	ALL
155	DQ04S	COUPLER 1/4 SOCK FEM	ALL
156	HB025	LARGE BATTERY BOX TRAY	ALL
157	VVB38	BALL VALVE 3/4" 3 WAY	ALL
158	D8169	HOSE BARB 1" x 3/4"P BRASS	ALL
159	D1128	BUSHING 3/4" x 1/2" BRASS	ALL
160	D5588	ELBOW; STREET; 1/2" BRASS	ALL
161	D8090	HOSE BARB 5/8"H x 1/2"MPT*	ALL
162	VVB38	BALL VALVE 3/4" 3 WAY	SC30009K,SC30009KAF
163	D8169	HOSE BARB 1" x 3/4"P BRASS	SC30009K,SC30009KAF
164	FB990	U BOLT 1/4"-20 x 1" x 1 3/4"	SC30009K,SC30009KAF
165	D5512	STREET ELBOW 3/4" BRASS	SC30009K,SC30009KAF
166	WT07B	FLOAT TANK 7.5 BLACK	SC30009K,SC30009KAF
167	WT082	FUEL CAP; BLANK	SC30009K,SC30009KAF
168	D012F	GARDEN H A 3/4"NPT FEM	SC30009K,SC30009KAF
169	FWC16	WASHER 1" ID PLATED	SC30009K,SC30009KAF
170	HL017	TANK CAP 4" W/HOLE	SC30009K,SC30009KAF
171	D1128	BUSHING 3/4" x 1/2" BRASS	SC30009K,SC30009KAF
172	VVF15	FLOAT VALVE-ROBERTSON	SC30009K,SC30009KAF
173	VVF16	PLASTIC TANK FLOAT BALL	SC30009K,SC30009KAF
174	FC012	WORMGEAR CLAMP 3/4"	SC30009K,SC30009KAF
175	DHB12	CLEAR BRAIDED TUBING 3/4"	SC30009K,SC30009KAF
176	VF126	TANK FILTER 3/4"	SC30009K,SC30009KAF
177	D2089	NIPPLE 3/4" BRASS	SC30009K,SC30009KAF
178	DFT12	TANK ADAPTER 3/4" PVC	SC30009K,SC30009KAF
179	D5612	STREET ELL 3/4" POLY	SC30009K,SC30009KAF
180	D8169	HOSE BARB 1"H x 3/4"P BRASS	SC30009K,SC30009KAF
181	WT054	FLOAT TANK ASM. SC30009K	SC30009K,SC30009KAF
182	HSC34	STRAP FLOAT TANK HOLD DOWN	SC30009K,SC30009KAF
183	ESS08	WIRE HARNESS 20 & 25 HP KOHLER SC	SC35005KQ,SC30009K,SC35005KQ