SC SERIES ADJUSTABLE FLOW

SC30008HAF & SC43006HAF
EFFECTIVE S/N 201000855
09-07-10

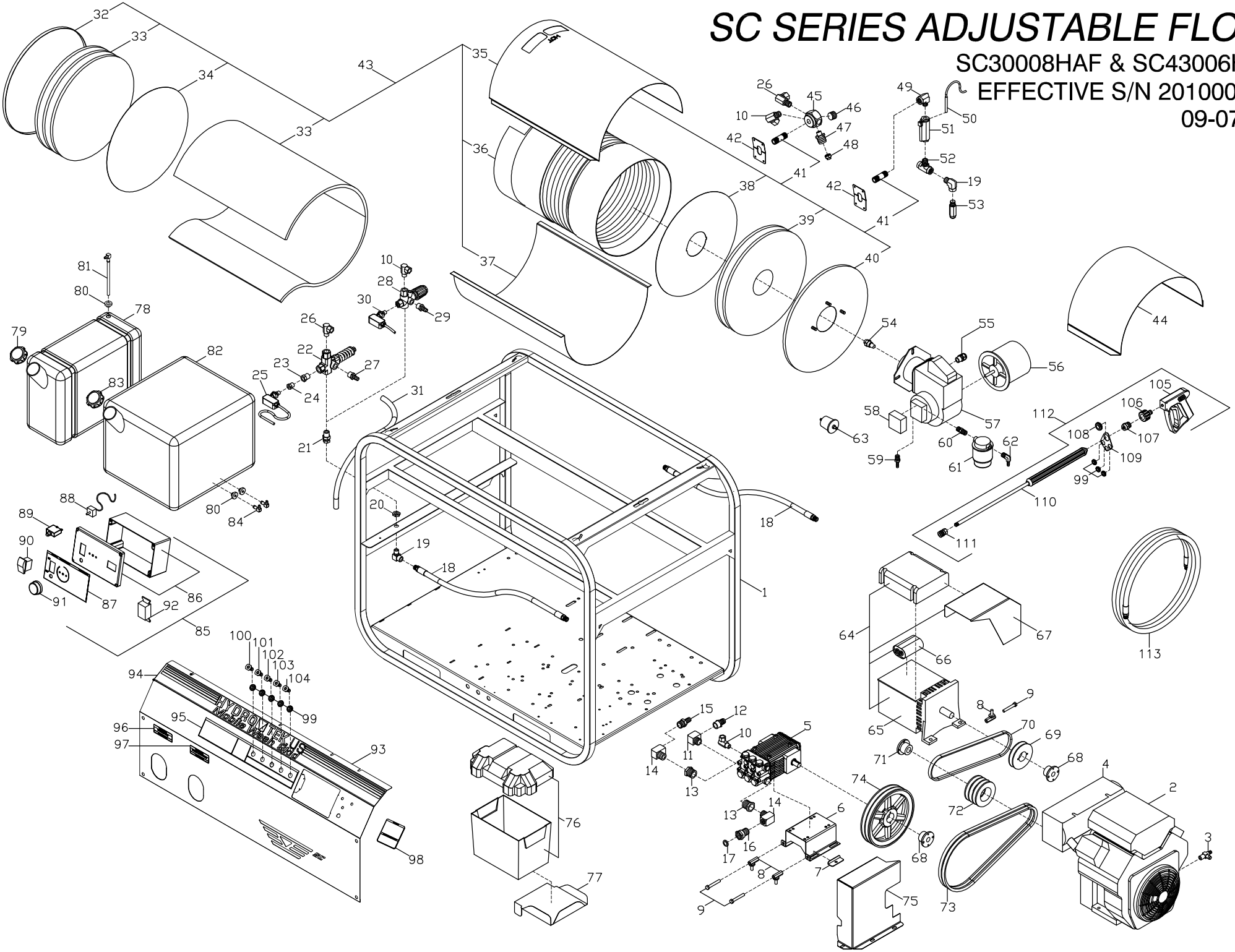

SC30008HAF & SC43006HAF PARTS LIST S/N201000855 7-Sep-10

1	HSC00	SC FRAME, P COATED PRO TEC	
2	MH240	ENGINE 24HP HONDA E/S W/MUFFLER	
3	MS007	OIL DRAIN VALVE 14mm	
4	HS088	MUFFLER HEAT SHIELD, 24 HONDA	
5	PG585	PUMP TSF2021 3600 @ 8.5 GPM	SC30008HAF
	PB435	PUMP, BERTOLINI 5.5 @ 4300 24MM.S	SC43006HAF
6	HPR07	PUMP MOUNTING RAIL STAINLESS	SC30008HAF
	HPR00	PUMP ANGLE RAIL CAT (NOT WELDED)	SC43006HAF
7	HRR07	REINFORCEMENT BRACKET- PUMP RAIL	SC30008HAF
	HSC09	REINFORCEMENT PLATE 10 GUAGE STEEL	SC43006HAF
8	HPR60	PUMP RAIL BOLT	
	HPR61	PUMP RAIL BOLT,EXTENDED LENGTH	
9	FB641	BOLT 3/8 X 2 1/2 PLD THREAD	
10	DE866	SWIVEL 3/8F X 3/8M 90	
11	D5512	STREET ELBOW 3/4" BRASS	SC30008HAF
12	D8169	HOSE BARB 1in.H X 3/4P BRASS	SC30008HAF
13	D1128	BUSHING 3/4 x 1/2 BRASS	SC43006HAF
14	D5588	STREAT ELL 1/2 BRASS	SC43006HAF
15	D8088	HOSE BARB 1/2 BRASS	SC43006HAF
16	D006M	GARDEN HA 3/8 NPT MALE	SC43006HAF
17	D0021	SCREEN WASHER GARDEN H A	SC43006HAF
18	DH034	HOSE 3/8 x 34" 5000 psi, NO WIP	SC30008HAF
	DH073	HOSE 3/8 x 34" 5000 psi	SC43006HAF
19	DC568	STREET ELL 3/8	
20	D7061	HEX NUT 3/8 BRASS-REMOTE UNLOADER	
21	DE568	SWIVEL 3/8F X 1/2M STEEL	SC30008HAF
	DE566	SWIVEL 3/8 STEEL	SC43006HAF
22	UU320	UNLOADER/REGUL 4000 @ 21 GREEN SPRING	SC30008HAF
23	DA086	BUSHING 1/2 X 3/8 STEEL	SC30008HAF
24	DA064	BUSHING 3/8 X 1/4 STEEL	SC30008HAF
25	VS030	PRESSURE SWITCH 4000 PA/PR16]	SC30008HAF
26	DE869	SWIVEL, 3/8FS x 1/2M STEEL 90	SC30008HAF
27	D8088	HOSE BARB 1/2 BRASS	SC30008HAF
28	UU323	UNLOADER 4200PSI 8GPM AR	SC43006HAF
29	D8068	HOSE BARB 1/2H X 3/8 BRASS	SC43006HAF
30	VS025	PRESSURE SWITCH 15AMP 5800P	SC43006HAF
31	DHC80	HOSE, 1/2 LO PRESS BLACK	
32	B0028	COIL CAP FLAT SC 18" NO HOLE	SC30008HAF
	B0029	COIL CAP (FLAT END COIL) NO HOLE	SC43006HAF
33	BN053	INSUL BLKT DISC CUT 17.5DIA NO HOLE	
34	BN112	INSULATION DISC RETAINER 18"	SC30008HAF
	BN125	INSULATION DISC RETAINER 17.5DIA	SC43006HAF
35	B2315	COIL WRAP TOP W/RG 36in ASM	SC30008HAF
	B0089	COIL WRAP (FLAT END COIL) TOP	SC43006HAF
36	BC480	COIL, 4PK SCH 80	
37	B2323	COIL WRAP BOTTOM ASM	SC30008HAF
	B0088	COIL WRAP (FLAT END COIL) BOTTOM	SC43006HAF
38	BN111	INSULATION DISC RETAINER 4in HOLE	SC30008HAF
	BN126	INSULATION DISC RETAINER 17.5DIA W/HOLE	SC43006HAF
39	BN054	INSULATION HEAD 18" (top hat)	SC30008HAF
	BN053	INSUL BLKT DISC CUT 17.5DIA W/HOLE	SC43006HAF

40	B0013	COIL CAP ASM 18in 4.5id GRAINE	SC30008HAF
	B0017	END CAP (FLAT END COIL) 18IN BU W/HOLE	SC43006HAF
41	BC855	BURNER NIPPLE, 1/2 x 5.5 SCH80	SC30008HAF
	BC850	BURNER NIPPLE, 1/2 x 5 SCH80	SC43006HAF
42	B2324	COIL NIPPLE RETAINER 1/2in	
43	BC488	COIL ASM 4PK SCH80 SC PROLINE	SC30008HAF
	BC225	COIL ASM 4PK (FLAT END COIL)	SC43006HAF
44	HHP15	BURNER RAINGUARD-HP-2004	SC43006HAF
45	HHA01	HEX MANI OUTLET 1/2 x 1/2 x REEL	
46	D1082	PLUG, 1/2 STEEL HEX HEAD FLUSH	
47	UPB05	ADAPTER FITTING-BURST DISC	
48	UPB80	BURST DISC 8000psi	
49	DE586	STREET ELL 1/2F X 3/8M STEEL	
50	VS003	REED SWITCH FOR(AP500)	
51	VS005	FLOW SWITCH 8 @ 4200 ST5	SC30008HAF
	VS019	FLOWSWITCH, 3/8"F, 5650 psi, 8g	SC43006HAF
52	DEB66	BRANCH TEE 3/8 STEEL	
53	UP137	PRESSURE RELIEF 3700psi black	SC30008HAF
	UPO60	PRESSURE RELIEF 6000 psi GENRL	SC43006HAF
54	BZ400	FUEL NOZZLE 4.0 90B	SC30008HAF
	BZ300	FUEL NOZZLE 3.00 90B	SC43006HAF
55	EWC08	STRAIN RELIEF 1/2 HEYCO (3/8)	
56	BM554	BURNER MOTOR 115V WAYNE	SC30008HAF
	BM513	BURNER MOTOR, BECKETT SM 110V	SC43006HAF
57	BU007	BURNER, WAYNE 110V CAP 2-3	SC30008HAF
	BU600	BURNER; BECKETT SM 110V	SC43006HAF
58	BPA10	FUEL PUMP MOD A2VA-7116	SC30008HAF
	BPA13	FUEL PUMP, BECKETT SM/BU600	SC43006HAF
59	D8044	HOSE BARB 1/4 BRASS	
60	D2044	NIPPLE BRASS 1/4	SC30008HAF
61	BF020	FUEL FILTER, RACOR HYDRO TEK	SC30008HAF
62	D8040	HOSE BARB 1/4 ELBOW	SC30008HAF
63	BF015	FUEL FILTER; INLINE	SC43006HAF
64	MB050	SC GENERATOR & GUARD ASSEMBLY	
65	MB020	GENERATOR 2500w LSA321L10	
66	MB025	CAPACITOR, MB020 GENERATOR	
67	HS033	SC GEN BELT GUARD	
68	KSH19	BUSHING H24MM	
69	KU050	SHEAVE 2BK50H	SC30008HAF
	KT040	SHEAVE BK40H	SC43006HAF
70	KSA34	BELT 5L260	SC30008HAF
	KSA30	BELT 5L230	SC43006HAF
71	KSP18	BUSHING P1 x 1 1/8	
72	KV046	SHEAVE 3TB46	SC30008HAF
	KV038	SHEAVE 3TB38	SC43006HAF
73	KSB42	BELT BX42	
74	KU110	SHEAVE 2BK110H	SC30008HAF
	KU100	SHEAVE 2BK100H	SC43006HAF
75	HS078	SC PUMP GUARD-HONDA 20HP	
76	HB100	BATTERY BOX ATTWOOD G24 (LARGE)	

77	HB025	LARGE BATTERY BOX TRAY 12-03 NEW	
78	WT07R	FUEL TANK 7.5 GAS RED	
79	WT081	FUEL CAP, GASOLINE	
80	DFF04	FUEL TANK BUSHING 1/4	
81	DF599	FUEL TANK ADAPTER W/PLASTIC TUBE	
82	WT078	FUEL TANK 18 DIESEL CLEAR	
83	WT080	FUEL CAP, DIESEL	
84	DFE04	FUEL TANK ELL 1/4	
85	HS027	CONT BOX SC3600/400 VAF/KAF	
86	HSC51	LASER CUT SC BOX ASM/TOP AND BOTTOM	
87	GLL57	LABEL,SC/SS PANEL CONTOL BOX	
88	ECH55	THERMOSTAT,60-190F	
89	ECF10	CIRCUT BREAKER 15 AMP	
90	EC410	ROCKER SWITCH 110V RED SPST	
91	ECH70	KNOB, BLUE .25 X 1.5OD	
92	EP154	GFCI DUPLEX RECEPTACLE 20 AMP	
93	HSC39	SC CONTROL PANEL VARIABLE FLOW-	
		---w/BLUE LABEL	
94	GLL79	LABEL HYDRO TEK 47.375 x 3	
95	GLL54	LABEL SC VARIABLE FLOW INSTRUC	
96	GLL10	LABEL GASOLINE ONLY	
97	GLL20	LABEL DIESEL FUEL ONLY	
98	GLL30	MAINTENANCE LABEL 4x4 SC,SS,SM	
99	HLB09	GROMET NOZZLE HOLDER	
100	NQ452	NOZZLE/QDC 045 x 15*	SC30008HAF
101	NQ452	NOZZLE/QDC 045 x 15*	
102	NQ502	NOZZLE/QDC 05 x 15	SC43006HAF
	NQ602	NOZZLE/QDC 06 x 15	SC30008HAF
103	NQ552	NOZZLE/QDC 055 x 15	SC43006HAF
	NQ752	NOZZLE/QDC 075 x 15	SC30008HAF
104	NQ902	NOZZLE/QDC 09 x 15	SC30008HAF
	NQ272	NOZZLE/QDC 027 x 15	SC43006HAF
105	VG200	GUN VALVE 12 @ 4000 ST1500	
106	DQ74T	M22 TWIST COUPLER 1/4" MALE	
107	DQ74F	TWIST COUPLER 1/4" PLUG FEM-SUT	
108	HLB30	GROMET; WAND 1"	
109	HNZ05	NOZZLE HOLDER (FOR WAND)	
110	VW045	WAND 1/4 x 48in MOLDED GRIP	
111	DQ04S	COUPLER 1/4 SOCK FEM	
112	AVGH3	WAND ASSEM 48" MOLDED GRIP-	
		--- w/NOZZLE HOLDER	
113	DH050	HOSE 3/8" x 50' 3000psi 250F BL	SC30008HAF
	DH060	HOSE 3/8 x 50' 5400 GREY NON M	SC43006HAF
NOT SHOWN			
	ABMAG	OPERATION PACKET GENERAL PRO	
	K169	VALVE KIT FOR PG585 PUMP	SC30008HAF
	K170	SEAL KIT FOR PG585 PUMP	SC30008HAF